


# SELECT Pull-Out Units

# SELECT Towel Rail Pull-Out Unit

Transform your storage with the SELECT 150mm Towel Rail Pull-Out in anthracite and chrome. This versatile pull-out system is both functional and stylish, making it a perfect addition to kitchens or bathrooms. Key features include:

**Key Features and Benefits**

- **Premium Finishes:** Available in anthracite and chrome.
- **Full-Extension Runners with Soft-Close:** Smooth and quiet operation, ensuring ease of use.
- **Left-Side Installation:** Designed to be mounted on the left side of the cabinet
- **Compact and Space-Saving Design:** Ideal for tight spaces or narrow cabinets.
- **Durable Build:** Supports up to 10kg, making it reliable for towels and other small items.
- **Long-Lasting Performance:** Tested for 50,000 opening cycles certified by CATAS.



## Anthracite



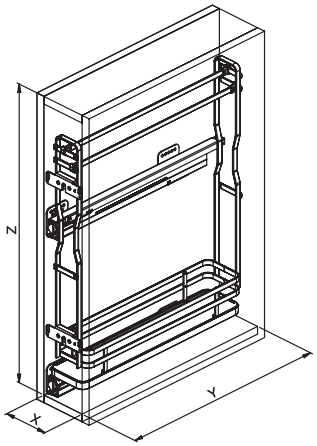


| Code | Cabinet Width | Width (X) | Depth (Y) | Height (Z) |
|---|---|---|---|---|
| CFS700 | 150mm | 110mm | 495mm | 640mm |



## Chrome

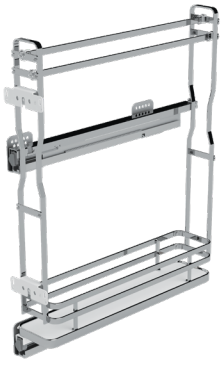

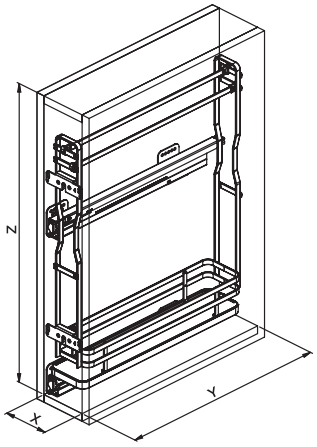


| Code | Cabinet Width | Width (X) | Depth (Y) | Height (Z) |
|---|---|---|---|---|
| CFS758 | 150mm | 110mm | 495mm | 640mm |

# SELECT Narrow Pull-Out Unit

The SELECT Pull-Out Systems in anthracite and chrome provide a stylish and functional solution for cabinet storage. Available in three widths (150mm, 200mm, and 300mm), these systems meet various storage needs. Key features include:

**Key Features and Benefits**

- **Multiple Width Options:** Choose from 150mm, 200mm, or 300mm to suit your cabinet dimensions.
- **Premium Finishes:** Available in anthracite and chrome.
- **Soft-Close, Full-Extension Runners:** Provide smooth, quiet operation and effortless access.
- **Left-Side Installation:** Securely attaches to your cabinet door for convenient use.
- **Robust Construction:**
  - **10kg Load Capacity:** For 150mm and 200mm pull-outs, ideal for towels and smaller items.
  - **30kg Load Capacity:** For the 300mm pull-out, perfect for heavier items like bottles and jars.
- **Space-Saving Design:** Optimizes storage in narrow cabinets or tight spaces.
- **Long-Lasting Performance:** Tested for 50,000 opening cycles certified by CATAS.



## Anthracite



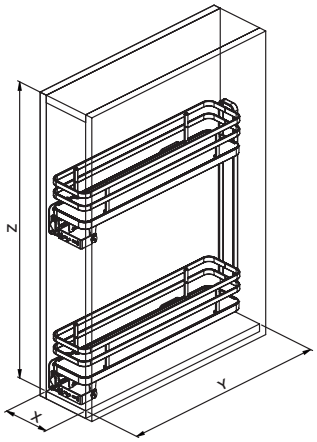


| Code | Cabinet Width | Width (X) | Depth (Y) | Height (Z) |
|---|---|---|---|---|
| CFS701 | 150mm | 110mm | 495mm | 640mm |
| CFS702 | 200mm | 160mm | 495mm | 540mm |
| CFS703 | 300mm | 264mm | 495mm | 540mm |



## Chrome

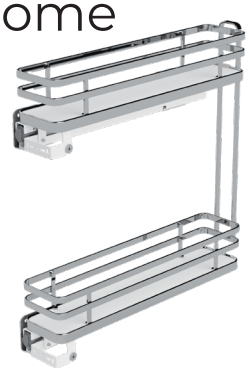

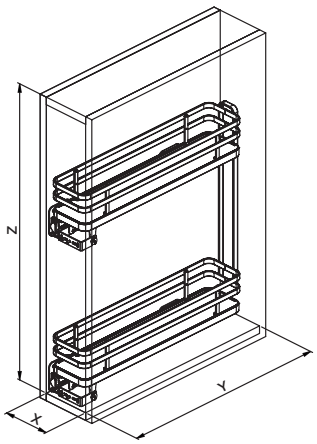


| Code | Cabinet Width | Width (X) | Depth (Y) | Height (Z) |
|---|---|---|---|---|
| CFS759 | 150mm | 110mm | 495mm | 540mm |
| CFS760 | 200mm | 160mm | 495mm | 540mm |
| CFS761 | 300mm | 264mm | 495mm | 540mm |

# SELECT Pull-Out Drawer

Upgrade your cabinet organisation with the SELECT Pull-Out Drawers in anthracite and chrome, designed to provide style, durability, and practicality. These drawers are available in 450mm, 500mm, and 600mm widths to suit your storage needs.

**Key Features and Benefits**

- **Three Width Options:** Choose from 450mm, 500mm, or 600mm to match your cabinet size.
- **Premium Finishes:** Available in anthracite and chrome.
- **30kg Full-Extension Runners with Soft-Close:** Ensure smooth, quiet, and effortless operation.
- **Hinged-Door Compatibility:** Internal basket designed for use with cabinets with hinged doors.
- **Adjustable Side Fittings:** Accommodates carcass thickness between 16mm and 19mm.
- **Compact Design:** Basket height of 90mm and overall height (including runners) of 140mm.
- **Durable Construction:** Built to support up to 30kg per basket, perfect for heavy pantry items.
- **Easy Installation:** Includes spacers for secure fixing to the hinge side.
- **Long-Lasting Performance:** Tested for 50,000 opening cycles certified by CATAS.



## Anthracite

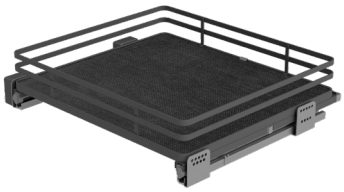

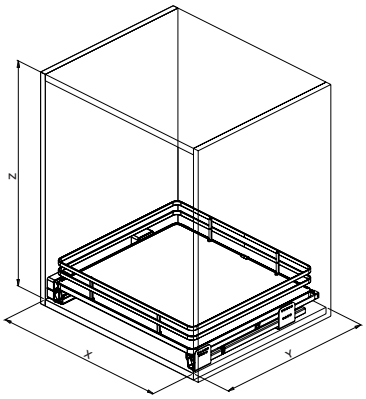


| Code | Cabinet Width | Width (X) | Depth (Y) | Height (Z) |
|---|---|---|---|---|
| CFS704 | 450mm | 410-418mm | 495mm | 135mm |
| CFS705 | 500mm | 460-468mm | 495mm | 135mm |
| CFS706 | 600mm | 560-568mm | 495mm | 135mm |



## Chrome

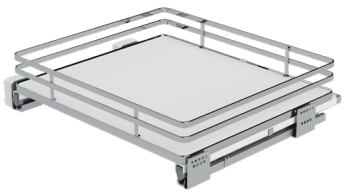

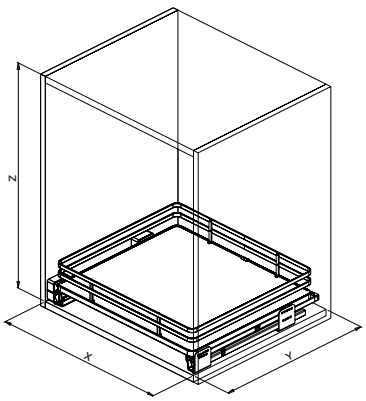


| Code | Cabinet Width | Width (X) | Depth (Y) | Height (Z) |
|---|---|---|---|---|
| CFS762 | 450mm | 410-418mm | 495mm | 135mm |
| CFS763 | 500mm | 460-468mm | 495mm | 135mm |
| CFS764 | 600mm | 560-568mm | 495mm | 135mm |

# SELECT Larder Pull-Out Unit

The SELECT Pull-Out Larder in anthracite and chrome is a stylish and practical storage solution, offering flexibility with options for 4, 5 or 6 baskets. Perfect for modern kitchens, it is designed to maximize cabinet storage and ensure easy access. Key features include:

**Key Features and Benefits**

- **Multiple Width Options:** Available in 300mm, 400mm, 450mm, 500mm, and 600mm widths to fit various cabinet sizes.
- **Adjustable Heights:** Frame height options include 1215-1515mm, 1615-1915mm, and 1880-2180mm for versatility.
- **Basket Configurations:** Choose between 4, 5 or 6 baskets to suit your storage capacity needs.
- **High Load Capacity:** Supports up to 150kg on mid-height and tall larders, ensuring durability and reliability.
- **Smooth and Quiet Operation:** Features integrated soft-close with 30kg full-extension runners for effortless access.
- **Long-Lasting Performance:** Tested for 100,000 opening and closing cycles certified by CATAS.
- **Premium Finishes:** Available in anthracite and chrome.



## Anthracite



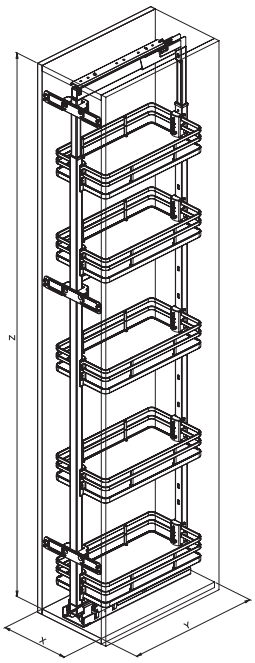

| Code | Bas-kets | Cabinet Width | Width (X) | Depth (Y) | Height (Z) |
|---|---|---|---|---|---|
| CFS707 | 4 | 300mm | 260mm | 505mm | 1215-1515mm |
| CFS709 | 4 | 400mm | 360mm | 505mm | 1215-1515mm |
| CFS710 | 4 | 450mm | 410mm | 505mm | 1215-1515mm |
| CFS711 | 4 | 500mm | 460mm | 505mm | 1215-1515mm |
| CFS712 | 4 | 600mm | 560mm | 505mm | 1215-1515mm |
| CFS713 | 5 | 300mm | 260mm | 505mm | 1615-1915mm |
| CFS714 | 5 | 400mm | 360mm | 505mm | 1615-1915mm |
| CFS715 | 5 | 450mm | 410mm | 505mm | 1615-1915mm |
| CFS716 | 5 | 500mm | 460mm | 505mm | 1615-1915mm |
| CFS717 | 5 | 600mm | 560mm | 505mm | 1615-1915mm |
| CFS718 | 6 | 300mm | 260mm | 505mm | 1880-2180mm |
| CFS719 | 6 | 400mm | 360mm | 505mm | 1880-2180mm |
| CFS720 | 6 | 450mm | 410mm | 505mm | 1880-2180mm |
| CFS721 | 6 | 500mm | 460mm | 505mm | 1880-2180mm |
| CFS722 | 6 | 600mm | 560mm | 505mm | 1880-2180mm |

# SELECT Larder Pull-Out Unit



## Chrome



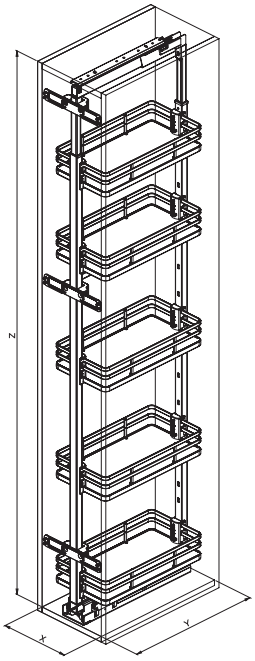

| Code | Bas-kets | Cabinet Width | Width (X) | Depth (Y) | Height (Z) |
|---|---|---|---|---|---|
| CFS765 | 4 | 300mm | 260mm | 505mm | 1215-1515mm |
| CFS766 | 4 | 400mm | 360mm | 505mm | 1215-1515mm |
| CFS767 | 4 | 450mm | 410mm | 505mm | 1215-1515mm |
| CFS768 | 4 | 500mm | 460mm | 505mm | 1215-1515mm |
| CFS769 | 4 | 600mm | 560mm | 505mm | 1215-1515mm |
| CFS770 | 5 | 300mm | 260mm | 505mm | 1615-1915mm |
| CFS771 | 5 | 400mm | 360mm | 505mm | 1615-1915mm |
| CFS772 | 5 | 450mm | 410mm | 505mm | 1615-1915mm |
| CFS773 | 5 | 500mm | 460mm | 505mm | 1615-1915mm |
| CFS774 | 5 | 600mm | 560mm | 505mm | 1615-1915mm |
| CFS775 | 6 | 300mm | 260mm | 505mm | 1880-2180mm |
| CFS776 | 6 | 400mm | 360mm | 505mm | 1880-2180mm |
| CFS777 | 6 | 450mm | 410mm | 505mm | 1880-2180mm |
| CFS778 | 6 | 500mm | 460mm | 505mm | 1880-2180mm |
| CFS779 | 6 | 600mm | 560mm | 505mm | 1880-2180mm |

# SELECT Secret Corner Unit

The SELECT Secret Corner Units in anthracite and chrome transforms hard-to-reach cabinet corners into accessible and organised spaces. Designed with functionality and style in mind, this innovative solution is available for 400mm, 450-500mm, and 600mm door widths with both left- and right-handed options. Key features include:

**Key Features and Benefits**

- **Multiple Door Width Options:** Fits cabinets with door widths of 400mm, 450-500mm, and 600mm.
- **Handing Options:** Available in both left-handed and right-handed configurations to suit your layout.
- **Gas Piston Technology:** Provides smooth soft-open and soft-close functionality for effortless operation.
- **High Weight Capacity:**
  - Supports up to 15kg on the front baskets.
  - Supports up to 20kg on the back baskets.
- **Compact Design:** Requires a minimum internal cabinet depth of 503mm and a minimum cabinet height of 580mm.
- **Durable and Stylish Finish:** Premium anthracite coating adds a modern aesthetic to any kitchen.
- **Long-Lasting Performance:** Tested for 100,000 opening cycles certified by CATAS.
- **Premium Finishes:** Available in anthracite and chrome.



## Anthracite



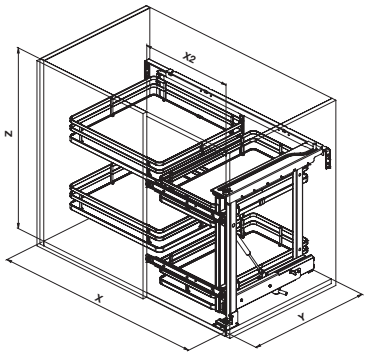


### Left Handed

| Code | Cabinet Width | Door Width (X2) | Width (X) | Depth (Y) | Height (Z) |
|---|---|---|---|---|---|
| CFS739 | 900mm | 400mm | 860-1000mm | 505mm | 600mm |
| CFS741 | 900mm | 450-500mm | 860-1000mm | 505mm | 600mm |
| CFS745 | 1200mm | 600mm | 1100-1168mm | 505mm | 600mm |

### Right Handed

| Code | Cabinet Width | Door Width (X2) | Width (X) | Depth (Y) | Height (Z) |
|---|---|---|---|---|---|
| CFS738 | 900mm | 400mm | 860-1000mm | 505mm | 600mm |
| CFS740 | 900mm | 450-500mm | 860-1000mm | 505mm | 600mm |
| CFS744 | 1200mm | 600mm | 1100-1168mm | 505mm | 600mm |

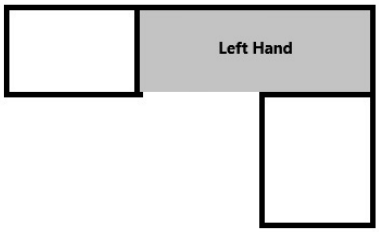


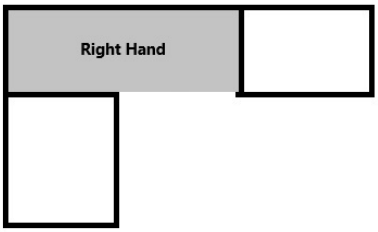

# SELECT Secret Corner Unit



## Chrome



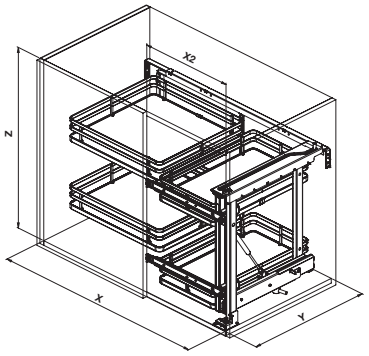


### Left Handed

| Code | Cabinet Width | Door Width (X2) | Width (X) | Depth (Y) | Height (Z) |
|---|---|---|---|---|---|
| CFS796 | 900mm | 400mm | 860-1000mm | 505mm | 600mm |
| CFS798 | 900mm | 450-500mm | 860-1000mm | 505mm | 600mm |
| CFS802 | 1200mm | 600mm | 1100-1168mm | 505mm | 600mm |

### Right Handed

| Code | Cabinet Width | Door Width (X2) | Width (X) | Depth (Y) | Height (Z) |
|---|---|---|---|---|---|
| CFS795 | 900mm | 400mm | 860-1000mm | 505mm | 600mm |
| CFS797 | 900mm | 450-500mm | 860-1000mm | 505mm | 600mm |
| CFS801 | 1200mm | 600mm | 1100-1168mm | 505mm | 600mm |

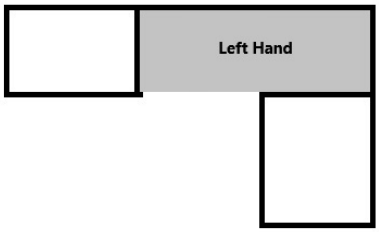


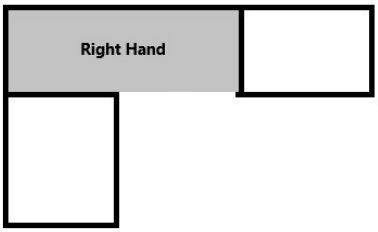

# SELECT Glide Corner Unit

The SELECT Glide Corner Unit in anthracite and chrome is a shelf-mounted system that optimises corner cabinets, providing smooth access and elegant design. Perfect for modern kitchens, this system combines functionality with a polished finish. Key features include:

**Key Features and Benefits**

- **Shelf-Mounted Design:** Bottom tray attaches to the cabinet base panel, while the upper tray is securely mounted to the unit shelf.
- **Multiple Door Width Options:** Designed for cabinets with door widths of 400mm, 450mm, 500mm, and 600mm.
- **Handing Options:** Available in both left-handed and right-handed configurations to suit your layout.
- **Dual-Motion Swing-Out Trays:** Trays smoothly swing out of the corner, making stored items easily accessible.
- **High Weight Capacity:** Each tray supports up to 20kg, ensuring reliable storage for heavy items like pots and pans.
- **Compact Installation Requirements:** Requires a minimum internal installation depth of 495mm and a minimum aperture of 360mm to 560mm, depending on the door width.
- **Premium Finishes:** Available in anthracite and chrome.
- **Double Height Rail:** Keeps items securely in place
- **Long-Lasting Performance:** Tested for 100,000 opening cycles certified by CATAS.



## Anthracite



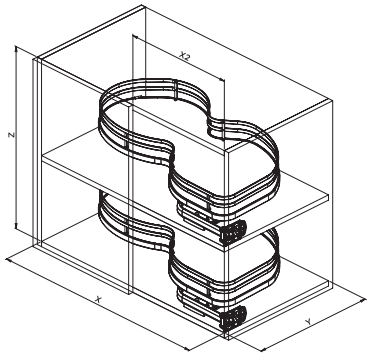


### Left Handed

| Code | Cabinet Width | Door Width (X2) | Width (X) | Depth (Y) | Height (Z) |
|---|---|---|---|---|---|
| CFS747 | 800mm | 400mm | 760mm | 470mm | 190mm |
| CFS749 | 900mm | 450mm | 860mm | 490mm | 190mm |
| CFS751 | 900mm | 500mm | 860mm | 490mm | 190mm |
| CFS753 | 1000mm | 600mm | 910mm | 490mm | 190mm |

### Right Handed

| Code | Cabinet Width | Door Width (X2) | Width (X) | Depth (Y) | Height (Z) |
|---|---|---|---|---|---|
| CFS746 | 800mm | 400mm | 760mm | 470mm | 190mm |
| CFS748 | 900mm | 450mm | 860mm | 490mm | 190mm |
| CFS750 | 900mm | 500mm | 860mm | 490mm | 190mm |
| CFS752 | 1000mm | 600mm | 910mm | 490mm | 190mm |

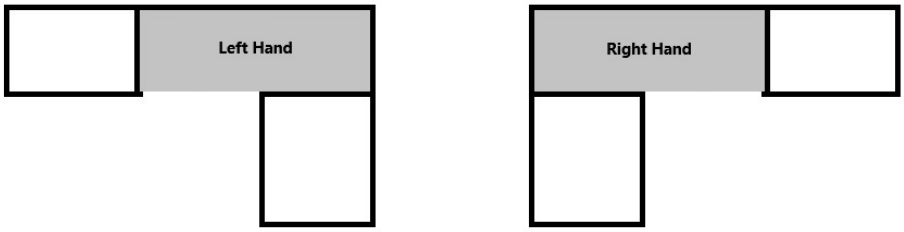

# SELECT Glide Corner Unit



## Chrome

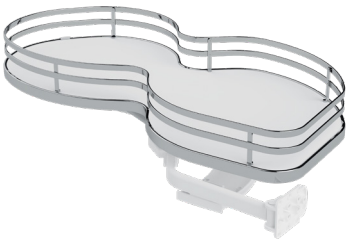

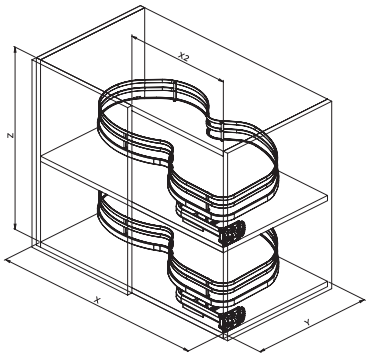


### Left Handed

| Code | Cabinet Width | Door Width (X2) | Width (X) | Depth (Y) | Height (Z) |
|---|---|---|---|---|---|
| CFS804 | 800mm | 400mm | 760mm | 470mm | 190mm |
| CFS806 | 900mm | 450mm | 860mm | 490mm | 190mm |
| CFS808 | 900mm | 500mm | 860mm | 490mm | 190mm |
| CFS810 | 1000mm | 600mm | 910mm | 490mm | 190mm |

### Right Handed

| Code | Cabinet Width | Door Width (X2) | Width (X) | Depth (Y) | Height (Z) |
|---|---|---|---|---|---|
| CFS803 | 800mm | 400mm | 760mm | 470mm | 190mm |
| CFS805 | 900mm | 450mm | 860mm | 490mm | 190mm |
| CFS807 | 900mm | 500mm | 860mm | 490mm | 190mm |
| CFS809 | 1000mm | 600mm | 910mm | 490mm | 190mm |

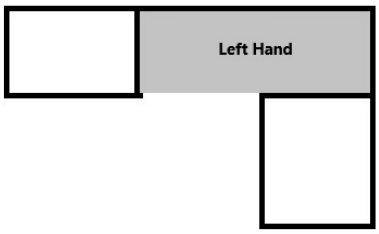


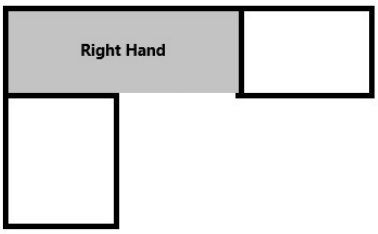

# SELECT Glide2 Corner Unit

The SELECT Glide2 Corner Solution in anthracite and chrome is a height-adjustable, non-shelf-mounted system that optimises corner cabinet storage with ease and style. Its non-handed design ensures universal installation, making it adaptable for any kitchen layout. Key features include:

**Key Features and Benefits**

- **Height-Adjustable Design:** Easily adjusts to suit various cabinet configurations, maximising storage space.
- **Non-Shelf-Mounted System:** No shelf mounting required, simplifying installation and ensuring a secure fit.
- **Non-Handed Configuration:** Universal design for flexible installation in any cabinet orientation.
- **Dual-Motion Swing-Out Trays:** Effortlessly swing out of the cabinet, providing smooth and easy access to stored items.
- **High Weight Capacity:** Each tray supports up to 20kg, making it ideal for storing heavy cookware, pantry items, or utensils.
- **Compact Installation Requirements:** Requires a minimum internal cabinet depth of 495mm and a minimum aperture of 360mm to 560mm, depending on the door width.
- **Secure Storage:** Double-height rail design keeps items securely in place during operation.



## Anthracite



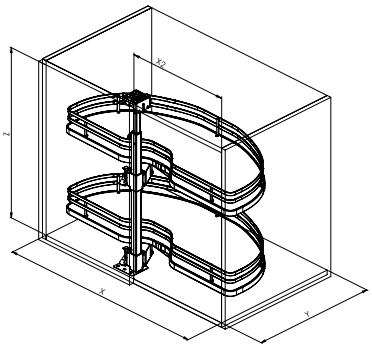

| Code | Cabinet Width | Door Width (X2) | Width (X) | Depth (Y) | Height (Z) |
|---|---|---|---|---|---|
| CFS754 | 800mm | 400mm | 760mm | 470mm | 670-790mm |
| CFS755 | 900mm | 450mm | 860mm | 490mm | 670-790mm |
| CFS756 | 900mm | 500mm | 860mm | 490mm | 670-790mm |
| CFS757 | 1000mm | 600mm | 910mm | 490mm | 670-790mm |



## Chrome

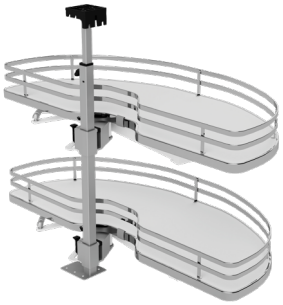

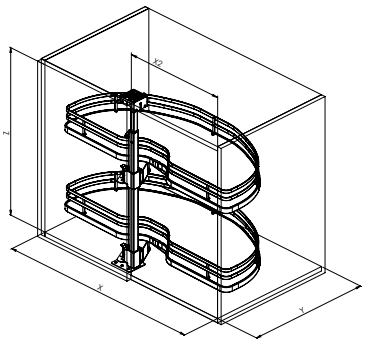

| Code | Cabinet Width | Door Width (X2) | Width (X) | Depth (Y) | Height (Z) |
|---|---|---|---|---|---|
| CFS811 | 800mm | 400mm | 760mm | 470mm | 670-790mm |
| CFS812 | 900mm | 450mm | 860mm | 490mm | 670-790mm |
| CFS813 | 900mm | 500mm | 860mm | 490mm | 670-790mm |
| CFS814 | 1000mm | 600mm | 910mm | 490mm | 670-790mm |

# SELECT Magic Corner Unit

The SELECT Magic Corner Unit in anthracite is a universal corner solution that transforms inaccessible cabinet corners into fully functional storage. With soft-close functionality and a robust design, it combines convenience with premium aesthetics.

**Key Features and Benefits**

- **Universal Design:** Suitable for both left-hand and right-hand hinged doors - no handing required.
- **4 Fully Retractable Baskets:** All baskets glide out of the cabinet for complete accessibility.
- **Soft-Close with Traverse Dampening:** Smooth and controlled movement thanks to integrated soft-close and soft-stop mechanism.
- **Impressive Load Capacity:** Supports a gross load of up to 64kg - ideal for storing heavier kitchen items.
- **Durable Anthracite Finish:** Modern matte coating that complements contemporary cabinetry.



## Anthracite



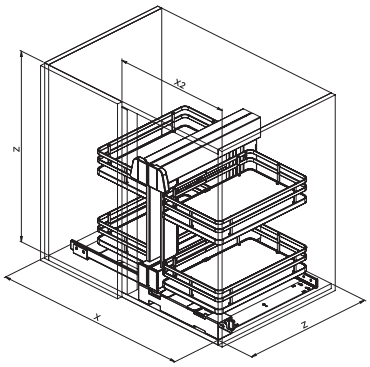


| Code | Cabinet Width | Door Width (X2) | Width (X) | Depth (Y) | Height (Z) |
|---|---|---|---|---|---|
| CFS860 | 900mm | 450mm | 760mm | 480mm | 540mm |
| CFS861 | 1000mm | 500mm | 760mm | 480mm | 540mm |
| CFS862 | 1200mm | 600mm | 960mm | 480mm | 540mm |



## Chrome



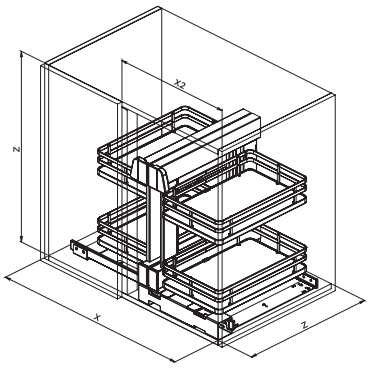


| Code | Cabinet Width | Door Width (X2) | Width (X) | Depth (Y) | Height (Z) |
|---|---|---|---|---|---|
| CFS863 | 900mm | 450mm | 760mm | 480mm | 540mm |
| CFS864 | 1000mm | 500mm | 760mm | 480mm | 540mm |
| CFS865 | 1200mm | 600mm | 960mm | 480mm | 540mm |


QUEST